AVIBRO®

Made in Turkey

ABV 1530/6

3 Phase / 4 Poles / 220-240*380-415 V / 200 Hz

Electrical Features

Phase	RPM	Frequency (Hz)	Input Voltage	Input Power	Input Current	Power Factor
3	6000	200	220-240*380-415 V	1050 W	▲2,82 Y 1,64	89 %

Technical Features

Centrifugal Force (Kg/F)	1405 Kg/F (13,77 kN)
Type of Grease	KLUBER ISOFLEX NB52
Greased for Life	Hayır / No
Mounting Bolt	M16
Cable Gland	M20x1.5
Weight (Kg)	17,00

Bearings

Bearing Type	NJ 205

Drawing | Overall Dimensions (mm)

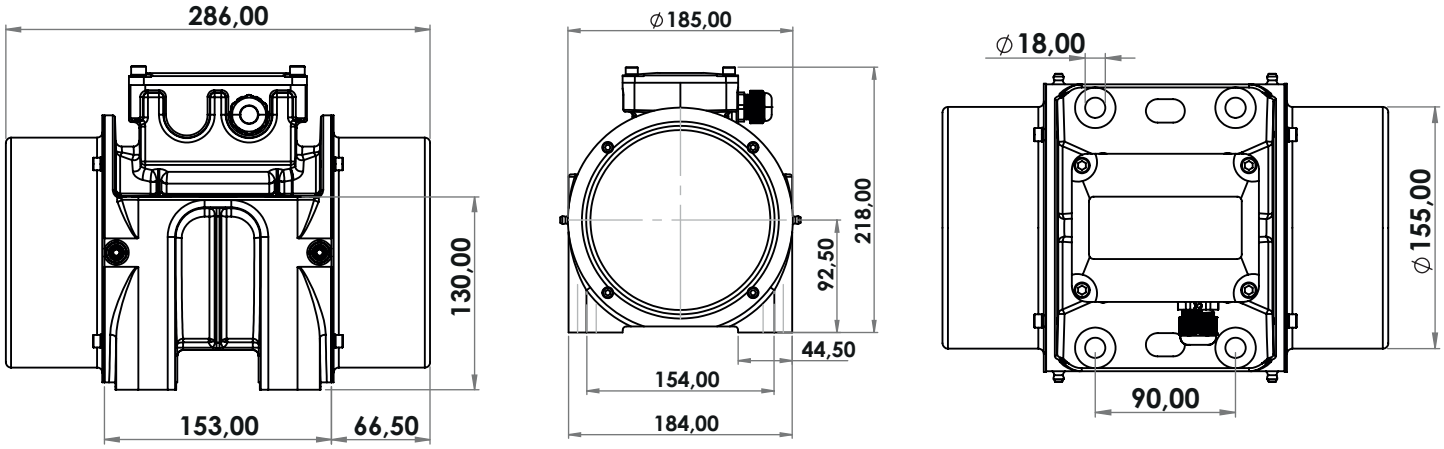

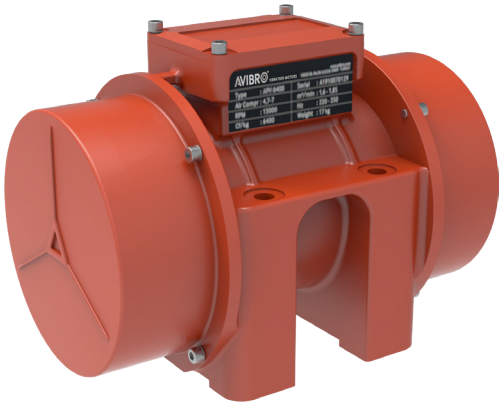

ATEX II 2D Ex tb IIIC T120°C Db,IP66
T.amb -20/+50°C